MASTER STAR
CONSTRUCTION - MATERIAL

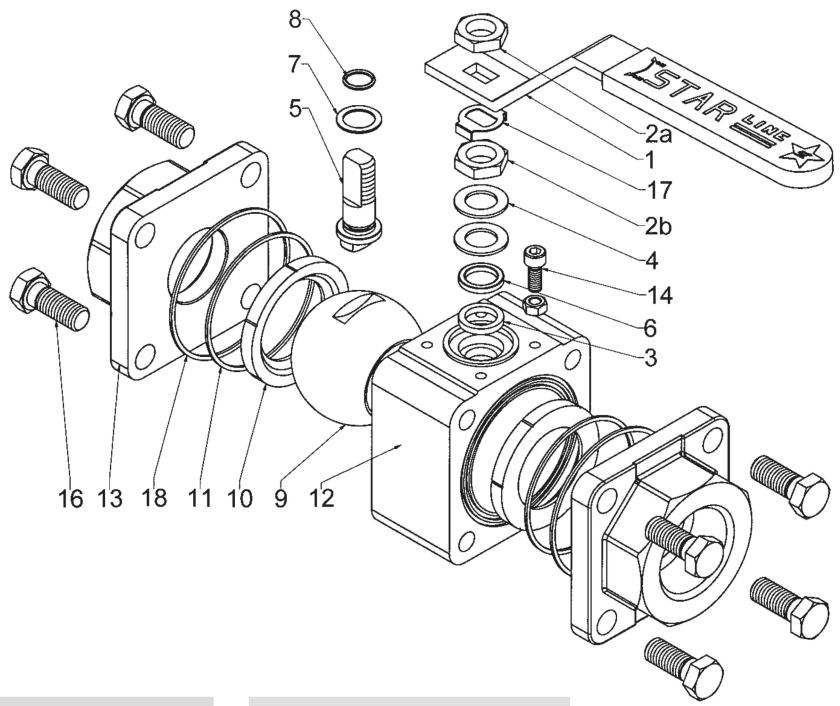

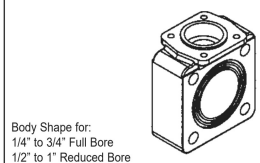

Body Shape for:
1/4" to 3/4" Full Bore
1/2" to 1" Reduced Bore
Number of Bolts: 4 + 4

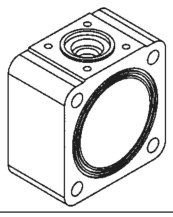

Body Shape for:
1" to 1.1/2" Full Bore
1.1/4" to 2" Reduced Bore
Number of Bolts: 4 + 4

- Suggested materials after 2 years service
- Empfohlene ersatzteile für 2 Jahres betrieb
- Pièces de rechange conseillées pour 2 ans de service
- Recambios aconsejados para 2 años de servico

•• Suggested materials after 5 years service
•• Empfohlene ersatzteile für 5 Jahres betrieb
•• Pièces de rechange conseillées pour 5 ans de service
•• Recambios aconsejados para 5 años de servico

ITEM	Q.TY	Part name - *Bezeichnung*	Designation - *Componentes*	A105/F316	LF2/F316	F316/F316
1	1	Handle - *Handhebel*	Levier - *Maneta*	C.S. Galvanized - Plastic cover	C.S. Galvanized - Plastic cover	C.S. Galvanized - Plastic cover
••2 A/B	2	Nut - *Mutter*	Ecrou - *Tuerca*	C.S. Cadmium -Plated	C.S. Cadmium -Plated	S.S. 316
• 3	1	Packing ring - *Stopfbuchsenpackung*	Garniture - *Junta eje*	Graphite	Graphite	Graphite
•• 4	2	Spring washer - *Tellerfedem*	Rondelle ressort - *Arandela*	Special S.S.	Special S.S.	Special S.S.
•• 5	1	Antistatic stem - *Antistatische spindel*	Tige antistatique - *Eje antiestatico*	S.S. 316	S.S. 316	S.S. 316
6	1	Gland packing - *Druck ring*	Fouloir - *Estopada*	S.S. 316	S.S. 316	S.S. 316
• 7	1	Thrust washer - *Spindeldichtung*	Rondelle butée - *Junta eje*	Reinf. PTFE	Reinf. PTFE	Reinf. PTFE
• 8	1	«O» Ring stem - *«O» Ring spindel*	Joint torique - *Torica eje*	VITON	VITON	VITON
•• 9	1	Ball - *Kugel*	Sphère - *Espera*	S.S. 316	S.S. 316	S.S. 316
• 10	2	Seats - *Sitzring*	Sièges - *Asientos*	T-R-S-B-U	T-R-S-B-U	T-R-S-B-U
• 11	2	Body seal - *Gehäusedichtung*	Joint de corps - *Junta cuerpo*	T-S-V-G	T-S-V-G	T-S-V-G
12	1	Body - *Gehäuse*	Corps - *Cuerpo*	ASTM A105N	A350 LF2	A182 F316
13	2	End connections - *Anschlubstutzen*	Embout - *Terminales*	ASTM A105N	A350 LF2	A182 F316L
14	1	Stop-pin - *Anschlag*	Butée - *Tope*	S.S. 304	S.S. 304	S.S. 304
16	8	Bolts - *Gehäuseschrauße*	Vis - *Goujon*	ASTM A193 - B7 Galvanized	ASTM A193 - B8	ASTM A193 B8
••17	1	Stop washer - *Sicherungsscheiße*	Rondelle-frein - *Arandela de seguridad*	S.S. 304	S.S. 304	S.S. 304
• 18	2	Body seal - *Gehäusedichtung*	Joint de corps - *Junta de cuerpo*	Graphite	Graphite	Graphite

DESCRIPTION

CONSTRUCTION : THREE PIECES BOLTED CONSTRUCTION - SOLID BALL - ANTI BLOW OUT PROOF STEM DESIGN - SOFT SEATS - ANTISTATIC DEVICE - ISO 5211 ON THE TOP FOR EASY AUTOMATION - FIRE TEST APPROVED.
SIZE : DN 8 ÷ 40 FULL BORE -- DN 15 ÷ 50 REDUCED BORE
1/4" ÷ 1.1/2" FULL BORE -- 1/2" ÷ 2" REDUCED BORE
CLASS : PN 16 ÷ 100 or ASME 150 ÷ 800 LBS
TEMPERATURE : -200°C UP TO + 260°C

DESIGN : ASME B16.34 - ASME B31.1 - BS5351 - API 6D - P.E.D. 97/23/EC - ATEX 94/9 CE
MARKING : MSS SP25
CE 0038 : ACCORDING TO DIRECTIVE 97/23/CE - MODULE H CATEGORY III - NOTIFIED BODY LLOYD'S REGISTERED CERTIFICATE NR. RPS 01060304/01
Ex IM2/II 2GD : ACCORDING TO ATEX 94/9 CE - TECHNICAL FILE NR. ST01 ATEX
TEST CERTIFICATE : UNI EN 10204 TYPE 3.1B UNLESS OTHERWISE REQUIRED
SERVICES : FOR PETROLEUM, CHEMICALS, PETROLCHEMICALS AND ALLIED INDUSTRIES

HOW TO ORDER

PORT DESIGN	TYPE OF VALVE	BASE MATERIAL BODY/TRIM	INSERT SEAT MATERIAL	STEM PACKING	FIRST BODY SEAL
1 Full Bore **2** Reduced Bore	**3** - Master Star	**1** 321/316 **2** A105/MONEL **3** A105/316 **4** F44/F44 **5** LF2/316 **6** 316/316 **7** 316L/316L **8** MONEL/MONEL **9** F51/F51 **0** All different materials	**T** Virgin PTFE **R** PTFE + 15% Fiberglass **S** PTFE + 25% Carbographite **B** PTFE + 60% Bronze **U** UHMWPE Polyetylene	**G** Graphite **T** Virgin PTFE **R** PTFE + 15% Fiberglass **S** PTFE + 25% Carbographite	**T** Virgin PTFE **S** PTFE + 25% Carbographite **V** O-Ring Viton **G** Graphite

NOTES:
The above codifications are punched on the nameplate.
Size, rating and connectoins are not in code and must be clearly shown on all orders.

EXAMPLE:
1/2" threaded NPT 800 LBS reduced bore body A105 trim 316 with PTFE seals.
ON THE ORDER MUST BE DESCRIBED :
1/2" NPT 800 LBS 233-TGT.G

MASTER STAR DIMENSION

THREADED ENDS

BSP Parallel:
BS21 - DIN 259 - ISO R/228 - UNI 338
BSP Taper:
BS21 - DIN 2999 - ISO R/7 - UNI 339
NPT:
ANSI B1 20.1

WELDED ENDS

S.W.:
ASME / ANSI B16.11 - BS 5351
B.W. - P.E.:
ASME / ANSI B16.25 Sch. 5S-10S-40-80-XS
Note: other overall lenghts are available on request.
Instruction for welding the valve on the line: With the valve in open position tack-weld in four points on both ends. Lift-out the center piece and complete the welding. Insert the center piece and control for easy operation.

INTEGRAL NIPPLES
S.W.:
ASME / ANSI B16.11 - BS 5351
B.W. - P.E.:
ASME / ANSI B16.25 Sch. 5S-10S-40-80-XS
Note: other overall lenghts are available on request.

WELDED NIPPLES:
ASME / ANSI B3610 B.W. - P.E.
Sch. 10-40-80-XS
Instruction for welding the valve on the line: With the valve in open position tack-weld in four points on both ends and then complete the welding without desmantling the valve.

FLANGED ENDS

FLANGES to ASME / ANSI B 16.5
FACE to FACE to ASME / ANSI B16.10
Note: when flanges are RF type of finish must be stated on the order.

FLANGES to DIN
DIN 2633 PN16 - DIN 2634 PN25
DIN 2635 PN40
FACE to FACE to EN 558-1 Basic Seried 1 (DIN 3202 F1)

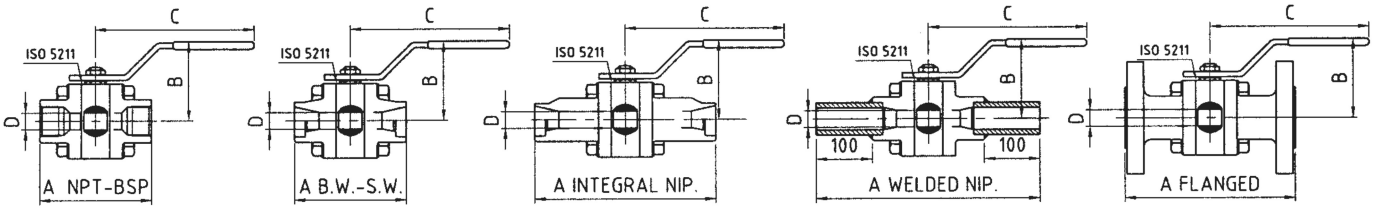

FULL BORE

VALVE SIZE		DIMENSIONS mm / Inch										ISO 5211	WEIGHT KG/LBS					
		A								B	C	D						
		NPT - BSP B.W. - S.W.	NIPPLES		FLANGED									NPT - BSP B.W. - S.W.	NIPPLES		FLANGED		
			INTEGRAL B.W. - S.W.	WELDED B.W. - P.E.	PN 16 - 25 - 40	150		300							INTEGRAL	WELDED	PN	150	300
						RF	RJ	RF	RJ										
DN	8	75	236	275	-	-	-	-	-	67	152	11.1	F03	1.1	1.5	1.2	-	-	-
Inch	*1/4"*	*2.9*	*9.3*	*10.8*	-	-	-	-	-	*2.6*	*6*	*0.44*		*2.4*	*3.3*	*2.6*	-	-	-
DN	10	75	236	275	-	-	-	-	-	67	152	11.1	F03	1	1.5	1.2	-	-	-
Inch	*3/8"*	*2.9*	*9.3*	*10.8*	-	-	-	-	-	*2.6*	*6*	*0.44*		*2.2*	*3.3*	*2.6*	-	-	-
DN	15	80	239	280	130	140	-	140	151.5	70	152	14.2	F03	1.3	1.7	1.6	3.2	3	3.4
Inch	*1/2"*	*3.2*	*9.4*	*11*	*5.1*	*5.5*	-	*5.5*	*6*	*2.7*	*6*	*0.56*		*2.8*	*3.7*	*3.5*	*7*	*6.6*	*7.5*
DN	20	100	250	300	150	152	-	152	165	80	193	20.5	F04	2.3	3	2.7	4.7	4.4	5.2
Inch	*3/4"*	*3.9*	*9.8*	*11.8*	*5.9*	*6*	-	*6*	*6.5*	*3.2*	*7.5*	*0.83*		*5*	*6.6*	*5.9*	*10.4*	*9.7*	*11.5*
DN	25	110	261	310	160	165	178	165	178	92	193	25.4	F04	3.2	4.3	3.9	6	5.5	7
Inch	*1"*	*4.3*	*10.3*	*12.2*	*6.3*	*6.5*	*7*	*6.5*	*7*	*3.6*	*7.5*	*1*		*7*	*9.4*	*8.6*	*13.2*	*12.1*	*15.4*
DN	32	120	272	320	180	178	191	178	191	108	225	31.7	F05	4.3	5.5	5.1	8.4	7.2	10
Inch	*1.1/4"*	*4.7*	*10.7*	*12.6*	*7.1*	*7*	*7.5*	*7*	*7.5*	*4.2*	*9*	*1.25*		*9.5*	*12.1*	*11.2*	*18.5*	*15.8*	*22*
DN	40	140	279	340	200	191	203.5	191	203	113	225	38	F05	5.8	7.2	6.8	10.5	9.5	13
Inch	*1.1/2"*	*5.5*	*11*	*13.4*	*7.9*	*7.5*	*8*	*7.5*	*8*	*4.4*	*9*	*1.5*		*12.8*	*15.8*	*15*	*23.1*	*21*	*28.6*

REDUCED BORE

VALVE SIZE		DIMENSIONS mm / Inch										ISO 5211	WEIGHT KG/LBS					
		A								B	C	D						
		NPT - BSP B.W. - S.W.	NIPPLES		FLANGED									NPT BSPP BSPT	NIPPLES		FLANGED		
			INTEGRAL B.W. - S.W.	WELDED B.W. - P.E.	PN 16 - 25 - 40	150		300							INTEGRAL	WELDED	PN	150	300
						RF	RJ	RF	RJ										
DN	15	75	236	275	130	108	-	140	151.5	67	152	11.1	F03	1	1.4	1.3	2.8	2.6	3
Inch	*1/2"*	*2.9*	*9.3*	*10.8*	*5.1*	*4.2*	-	*5.5*	*6*	*2.6*	*6*	*0.44*		*2.2*	*3.1*	*2.8*	*6.2*	*5.7*	*6.6*
DN	20	80	239	280	150	117.5	-	152	165	70	152	14.2	F03	1.2	1.7	1.6	3.5	3.2	4
Inch	*3/4"*	*3.2*	*9.4*	*11*	*5.9*	*4.6*	-	*6*	*6.5*	*2.7*	*6*	*0.56*		*2.6*	*3.7*	*3.5*	*7.7*	*7*	*8.8*
DN	25	100	250	300	160	127	140	165	178	80	193	20.5	F04	2.2	3	2.8	5	4.4	5.8
Inch	*1"*	*3.9*	*9.8*	*11.8*	*6.3*	*5*	*5.5*	*6.5*	*7*	*3.2*	*7.5*	*0.83*		*4.8*	*6.6*	*6.2*	*11*	*9.7*	*12.8*
DN	32	110	261	310	180	140	152.5	178	191	92	193	25.4	F04	3.1	4.3	4	7	6	8.5
Inch	*1.1/4"*	*4.3*	*10.3*	*12.2*	*7.1*	*5.5*	*6*	*7*	*7.5*	*3.6*	*7.5*	*1*		*6.8*	*9.4*	*8.8*	*15.4*	*13.2*	*18.7*
DN	40	120	272	320	200	165	178	191	203	108	225	31.7	F05	4.2	5.5	5.2	9	8	11.5
Inch	*1.1/2"*	*4.7*	*10.7*	*12.6*	*7.9*	*6.5*	*7*	*7.5*	*8*	*4.2*	*9*	*1.25*		*9.2*	*12.1*	*11.4*	*19.8*	*17.6*	*25.3*
DN	50	140	279	340	230	178	191	216	232	113	225	38	F05	5.5	7.2	6.8	11.5	11	14
Inch	*2"*	*5.5*	*11*	*13.4*	*9.1*	*7*	*7.5*	*8.5*	*9*	*4.4*	*9*	*1.5*		*12.1*	*15.8*	*15*	*25.3*	*24.2*	*30.8*

DIFFERENT CONFIGURATIONS FOR MASTER STAR & SUPER STAR

OVAL HANDLE

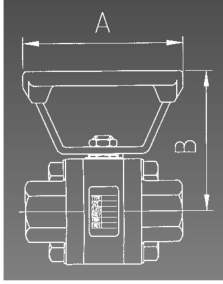

Valve Size		Dimension		Type of Handle
Full B.	Red. B.	A	B	
1/4"	-	100	100	OH1
3/8"	1/2"	100	100	
1/2"	3/4"	100	103	
3/4"	1"	100	108	OH2
1"	1.1/4"	100	112	

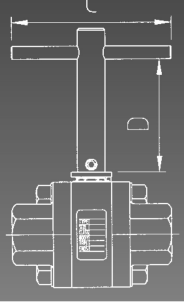

"T" HANDLE

Valve Size		Dimension		Type of Extention
Full B.	Red. B.	C	D	
1/4"	-	140	115	OH1
3/8"	1/2"	140	115	
1/2"	3/4"	140	115	
3/4"	1"	150	125	OH2
1"	1.1/4"	150	125	
1.1/4"	1.1/2"	220	132	TH3
1.1/2"	2"	220	132	
2"	2.1/2"	220	132	
2.1/2"	3"	300	152	TH4
3"	4"	450	168	TH5

LOCKING DEVICE

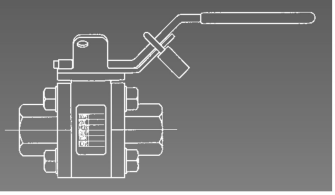

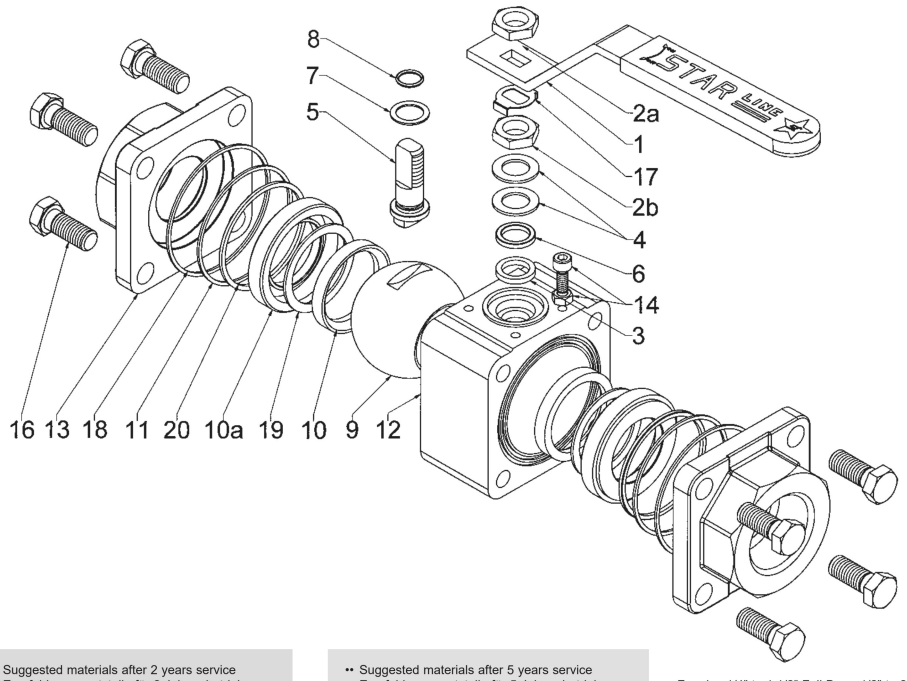

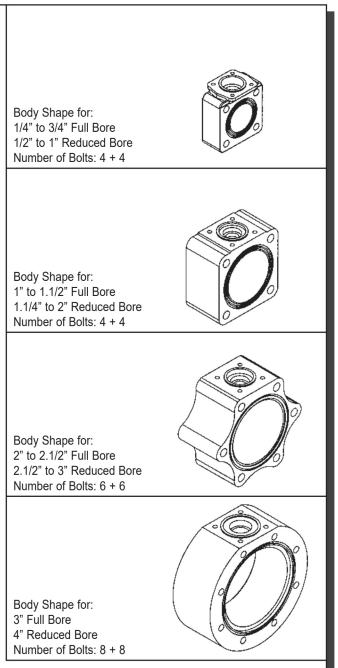

- Suggested materials after 2 years service
- Empfohlene ersatzteile für 2 Jahres betrieb
- Pièces de rechange conseillées pour 2 ans de service
- Recambios aconsejados para 2 años de servico

•• Suggested materials after 5 years service
•• Empfohlene ersatzteile für 5 Jahres betrieb
•• Pièces de rechange conseillées pour 5 ans de service
•• Recambios aconsejados para 5 años de servico

For size 1/4" to 1.1/2" Full Bore; 1/2" to 2" Reduced Bore n° 4 Bolts for Side
For size 2" Full Bore; 2.1/2" Reduced Bore n°6 Bolts for Side
For size 2.1/2" Full Bore; 3" Reduced Bore n°8 Bolts for Side

ITEM	Q.TY	Part name - *Bezeichnung*	Designation - *Componentes*	A105/F316	LF2/F316	F316/F316
1	1	Handle - *Handhebel*	Levier - *Maneta*	C.S. Galvanized - Plastic cover	C.S. Galvanized - Plastic cover	C.S. Galvanized - Plastic cover
••2 A B	2	Nut - *Mutter*	Ecrou - *Tuerca*	C.S. Cadmium -Plated	C.S. Cadmium -Plated	S.S. 316
• 3	1	Packing ring - *Stopfbuchsenpackung*	Garniture - *Junta eje*	Graphite	Graphite	Graphite
•• 4	2	Spring washer - *Tellerfedem*	Rondelle ressort - *Arandela*	Special S.S.	Special S.S.	Special S.S.
•• 5	1	Antistatic stem - *Antistatische spindel*	Tige antistatique - *Eje antiestatico*	S.S. 316	S.S. 316	S.S. 316
6	1	Gland packing - *Druck ring*	Fouloir - *Estopada*	S.S. 316	S.S. 316	S.S. 316
• 7	1	Thrust washer - *Spindeldichtung*	Rondelle butée - *Junta eje*	Reinf. PTFE	Reinf. PTFE	PTFE
• 8	1	«O» Ring stem - *«O» Ring spindel*	Joint torique - *Torica eje*	VITON	VITON	VITON
•• 9	1	Ball - *Kugel*	Sphère - *Espera*	S.S. 316	S.S. 316	S.S. 316
• 10	2	Seats - *Sitzring*	Sièges - *Asientos*	T-R-S-B-U-N-P-E-Z	T-R-S-B-U-N-P-E-Z	T-R-S-B-U-N-P-E-Z
• 11	2	Body seal - *Gehäusedichtung*	Joint de corps - *Junta cuerpo*	T-S-V-G	T-S-V-G	T-S-V-G
12	1	Body - *Gehäuse*	Corps - *Cuerpo*	ASTM A105N	A350 LF2	A182 F316
13	2	End connections - *Anschlubstutzen*	Embout - *Terminales*	ASTM A105N	A350 LF2	A182 F316L
14	1	Stop-pin - *Anschlag*	Butée - *Tope*	S.S. 304	S.S. 304	S.S. 304
16	8-12-16	Bolts - *Gehäuseschraube*	Vis - *Goujon*	ASTM A193 - B7 Galvanized	ASTM A193 - B8	ASTM A193 B8
••17	1	Stop washer - *Sicherungsscheiße*	Rondelle-frein - *Arandela de seguridad*	S.S. 304	S.S. 304	S.S. 304
• 18	2	Body seal - *Gehäusedichtung*	Joint de corps - *Junta de cuerpo*	Graphite	Graphite	Graphite
19	2	Seat Seal - *Sitzdichtung*	Joints de siège - *Junta asientos*	Graphite - Virgin PTFE	Graphite - Virgin PTFE	Graphite - Virgin PTFE
20	2	Ring Seal- *Ring auchtung*	Bague de joint - *Anillo de junta*	Graphite - T - S	Graphite - T - S	Graphite - T - S
10A	2	Ring Seat - *Ring Sitering*	Bague de siège - *Anillo de asiento*	ASMA 105N	A 350 LF2	A 182 F316

DESCRIPTION

CONSTRUCTION : THREE PIECES BOLTED CONSTRUCTION - SOLID BALL - ANTI BLOW OUT PROOF STEM DESIGN - ENCAPSULATED - SOFT SEATS - ANTISTATIC DEVICE - ISO 5211 ON THE TOP FOR EASY AUTOMATION - FIRE TEST APPROVED.
SIZE : DN 8 ÷ 80 FULL BORE -- DN 15 ÷ 100 REDUCED BORE
1/4" ÷ 3" FULL BORE -- 1/2" ÷ 4" REDUCED BORE
CLASS : PN 16 ÷ 150 or ASME 150 ÷ 900 LBS
TEMPERATURE : -200°C UP TO + 450°C
MATERIAL : ASTM A 105 - LF2 - 316 - 316L AND SPECIAL MATERIALS

DESIGN : ASME B16.34 - ASME B31.1 - BS5351 - API 6D - P.E.D. 97/23/EC - ATEX 94/9 CE
MARKING : MSS SP25
CE 0038 : ACCORDING TO DIRECTIVE 97/23/CE - MODULE H CATEGORY III - NOTIFIED BODY LLOYD'S REGISTERED CERTIFICATE NR. RPS 01060304/01
Ex IM2/II 2GD : ACCORDING TO ATEX 94/9 CE - TECHNICAL FILE NR. ST01 ATEX

TEST CERTIFICATE : UNI EN 10204 TYPE 3.1B UNLESS OTHERWISE REQUIRED
SERVICES : FOR PETROLEUM, CHEMICALS, PETROLCHEMICALS AND ALLIED INDUSTRIES

HOW TO ORDER

1 = PORT DESIGN	2 = TYPE OF VALVE	3 = BASE MATERIAL BODY/TRIM	4 = INSERT SEAT MATERIAL	5 = STEM PACKING	6 = FIRST BODY SEAL
1 Full Bore **2** Reduced Bore	**1** - Super Star	**1** 321/316 **2** A105/MONEL **3** A105/316 **4** F44/F44 **5** LF2/316 **6** 316/316 **7** 316L/316L **8** MONEL/MONEL **9** F51/F51 **0** All different materials	**T** Virgin PTFE **R** PTFE + 15% Fiberglass **S** PTFE + 25% Carbographite **B** PTFE + 60% Bronze **U** UHMWPE Polyetylene N DEVLON - V Polyamide-Nylon P PEEK Polyther Ketone E VESPEL SP 21 Polyimide Z TEFZEL ETFE (704-25)	**G** Graphite **T** Virgin PTFE **R** PTFE + 15% Fiberglass **S** PTFE + 25% Carbographite	**T** Virgin PTFE **S** PTFE + 25% Carbographite **V** O-Ring Viton **G** Graphite

NOTES:
The above codifications are punched on the nameplate. Size, rating and connectoins are not in code and must be clearly shown on all orders.

EXAMPLE:
2.1/2" butt welding 600 LBS reduced bore body A105 trim 316 with reinforced PTFE seals.
ON THE ORDER MUST BE DESCRIBED :
2.1/2" BW 600 LBS 213-SGS.G

THREADED ENDS

BSP Parallel:
BS21 - DIN 259 - ISO R/228 - UNI 338
BSP Taper:
BS21 - DIN 2999 - ISO R/7 - UNI 339
NPT:
ANSI B1 20.1

WELDED ENDS

INTEGRAL NIPPLES
S.W.: ASME / ANSI B16.11 - BS 5351
B.W. - P.E.: ASME / ANSI B16.25 Sch.
5S-10S-40-80-XS
Note: other overall lenghts are available on request.

WELDED NIPPLES:
ASME / ANSI B3610 B.W. - P.E.
Sch. 10-40-80-XS

Instruction for welding the valve on the line:
With the valve in open position tack-weld in four points on both ends and then complete the welding without desmantling the valve.

FLANGED ENDS

FLANGES to ASME / ANSI B 16.5
FACE to FACE to ASME / ANSI B16.10
Note: when flanges are RF type of finish must be stated on the order.

FLANGES to DIN
DIN 2633 PN16 - DIN 2634 PN25
DIN 2635 PN40
FACE to FACE to EN 558-1 Basic Seried 1
(DIN 3202 F1)

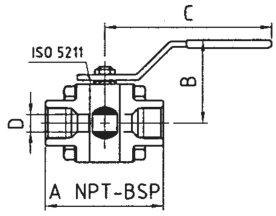

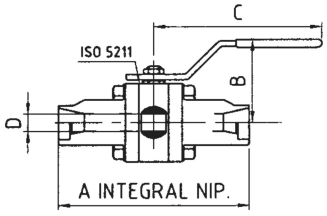

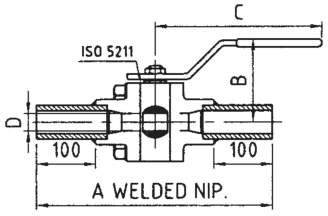

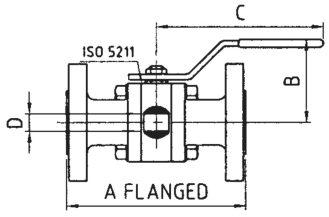

FULL BORE

VALVE SIZE		DIMENSIONS mm / Inch													ISO 5211	WEIGHT KG/LBS						
		A										B	C	D								
		NPT - BSP	NIPPLES		FLANGED											NPT - BSP	NIPPLES		FLANGED			
			INTEGRAL B.W. - S.W.	WELDED B.W. - P.E.	PN 16 - 25 - 40	150		300		600							INTEGRAL	WELDED	PN	150	300	600
						RF	RJ	RF	RJ	RF	RJ											
DN	8	75	236	275	-	-	-	-	-	-	-	67	152	11.1	F03	1.1	1.5	1.2	-	-	-	-
Inch	*1/4"*	*2.9*	*9.3*	*10.8*	-	-	-	-	-	-	-	*2.6*	*6*	*0.44*		*2.4*	*3.3*	*2.6*	-	-	-	-
DN	10	75	236	275	-	-	-	-	-	-	-	67	152	11.1	F03	1	1.5	1.2	-	-	-	-
Inch	*3/8"*	*2.9*	*9.3*	*10.8*	-	-	-	-	-	-	-	*2.6*	*6*	*0.44*		*2.2*	*3.3*	*2.6*	-	-	-	-
DN	15	80	239	280	130	140	-	140	151.5	165	163.5	70	152	14.2	F03	1.3	1.7	1.6	3.2	3	3.4	4.1
Inch	*1/2"*	*3.2*	*9.4*	*11*	*5.1*	*5.5*	-	*5.5*	*6*	*6.5*	*6.4*	*2.7*	*6*	*0.56*		*2.8*	*3.7*	*3.5*	*7*	*6.6*	*7.5*	*9*
DN	20	100	250	300	150	152	-	152	165	191	191	80	193	20.5	F04	2.3	3	2.7	4.7	4.4	5.2	5.9
Inch	*3/4"*	*3.9*	*9.8*	*11.8*	*5.9*	*6*	-	*6*	*6.5*	*7.5*	*7.5*	*3.2*	*7.5*	*0.83*		*5*	*6.6*	*5.9*	*10.4*	*9.7*	*11.5*	*13*
DN	25	110	261	310	160	165	178	165	178	216	216	92	193	25.4	F04	3.2	4.3	3.9	6	5.5	7	7.8
Inch	*1"*	*4.3*	*10.3*	*12.2*	*6.3*	*6.5*	*7*	*6.5*	*7*	*8.5*	*8.5*	*3.6*	*7.5*	*1*		*7*	*9.4*	*8.6*	*13.2*	*12.1*	*15.4*	*17.2*
DN	32	120	272	320	180	178	191	178	191	229	229	108	225	31.7	F05	4.3	5.5	5.1	8.4	7.2	10	10.8
Inch	*1.1/4"*	*4.7*	*10.7*	*12.6*	*7.1*	*7*	*7.5*	*7*	*7.5*	*9*	*9*	*4.2*	*9*	*1.25*		*9.5*	*12.1*	*11.2*	*18.5*	*15.8*	*22*	*23.8*
DN	40	140	279	340	200	191	203.5	191	203	241	241	113	225	38	F05	5.8	7.2	6.8	10.5	9.5	13	15
Inch	*1.1/2"*	*5.5*	*11*	*13.4*	*7.9*	*7.5*	*8*	*7.5*	*8*	*9.5*	*9.5*	*4.4*	*9*	*1.5*		*12.8*	*15.8*	*15*	*23.1*	*21*	*28.6*	*33*
DN	50	141	191	-	230	216	229	216	229	292	295	118	225	49	F05	10	10	-	17.5	16.5	19	21
Inch	*2"*	*5.6*	*7.5*	-	*9.1*	*8.5*	*9*	*8.5*	*9*	*11.5*	*11.6*	*4.6*	*9*	*1.93*		*22*	*22*	-	*48.3*	*36.3*	*42*	*46*
DN	65	170	210	-	290	241	254	241	254	333	349	136	450	62	F07	13.5	13.5	-	23	22.5	25	28
Inch	*2.1/2"*	*6.7*	*8.3*	-	*11.4*	*9.5*	*10*	*9.5*	*10*	*13.1*	*13.7*	*5.4*	*17.7*	*2.5*		*29.7*	*29.7*	-	*53.8*	*49.5*	*55*	*62*
DN	80	305	305	-	310	283	296	283	296	-	-	150	450	76	F07	26	26	-	28.5	35	38	-
Inch	*3"*	*12*	*12*	-	*12.2*	*11.1*	*11.7*	*11.1*	*11.7*	-	-	*5.9*	*17.7*	*3*		*58*	*58*	-	*59.3*	*77*	*84*	-

REDUCED BORE

VALVE SIZE		DIMENSIONS mm / Inch													ISO 5211	WEIGHT KG/LBS						
		A										B	C	D								
		NPT - BSP	NIPPLES		FLANGED											NPT - BSP	NIPPLES		FLANGED			
			INTEGRAL B.W. - S.W.	WELDED B.W. - P.E.	PN 16 - 25 - 40	150		300		600							INTEGRAL	WELDED	PN	150	300	600
						RF	RJ	RF	RJ	RF	RJ											
DN	15	75	236	275	130	108	-	140	151.5	165	163.5	67	152	11.1	F03	1	1.4	1.3	2.8	2.6	3	3.8
Inch	*1/2"*	*2.9*	*9.3*	*10.8*	*5.1*	*4.2*	-	*5.5*	*6*	*6.5*	*6.4*	*2.6*	*6*	*0.44*		*2.2*	*3.1*	*2.8*	*6.2*	*5.7*	*6.6*	*8.4*
DN	20	80	239	280	150	117.5	-	152	165	191	191	70	152	14.2	F03	1.2	1.7	1.6	3.5	3.2	4	4.8
Inch	*3/4"*	*3.2*	*9.4*	*11*	*5.9*	*4.6*	-	*6*	*6.5*	*7.5*	*7.5*	*2.7*	*6*	*0.56*		*2.6*	*3.7*	*3.5*	*7.7*	*7*	*8.8*	*10.6*
DN	25	100	250	300	160	127	140	165	178	216	216	80	193	20.5	F04	2.2	3	2.8	5	4.4	5.8	6.8
Inch	*1"*	*3.9*	*9.8*	*11.8*	*6.3*	*5*	*5.5*	*6.5*	*7*	*8.5*	*8.5*	*3.2*	*7.5*	*0.83*		*4.8*	*6.6*	*6.2*	*11*	*9.7*	*12.8*	*15*
DN	32	110	261	310	180	140	152.5	178	191	229	229	92	193	25.4	F04	3.1	4.3	4	7	6	8.5	9.5
Inch	*1.1/4"*	*4.3*	*10.3*	*12.2*	*7.1*	*5.5*	*6*	*7*	*7.5*	*9*	*9*	*3.6*	*7.5*	*1*		*6.8*	*9.4*	*8.8*	*15.4*	*13.2*	*18.7*	*20.9*
DN	40	120	272	320	200	165	178	191	203	241	241	108	225	31.7	F05	4.2	5.5	5.2	9	8	11.5	13.5
Inch	*1.1/2"*	*4.7*	*10.7*	*12.6*	*7.9*	*6.5*	*7*	*7.5*	*8*	*9.5*	*9.5*	*4.2*	*9*	*1.25*		*9.2*	*12.1*	*11.4*	*19.8*	*17.6*	*25.3*	*29.7*
DN	50	140	279	340	230	178	191	216	232	292	295	113	225	38	F05	5.5	7.2	6.8	11.5	11	14	17
Inch	*2"*	*5.5*	*11*	*13.4*	*9.1*	*7*	*7.5*	*8.5*	*9*	*11.5*	*11.6*	*4.4*	*9*	*1.5*		*12.1*	*15.8*	*15*	*25.3*	*24.2*	*30.8*	*37.4*
DN	65	141	191	-	290	191	203	241	254	333	349	118	225	49	F05	9	9	-	14	15.5	18	20
Inch	*2.1/2"*	*5.6*	*7.5*	-	*11.4*	*7.5*	*8*	*9.5*	*10*	*13.1*	*13.7*	*4.6*	*9*	*1.93*		*19.8*	*19.8*	-	*31.8*	*34.1*	*39.6*	*44*
DN	80	170	210	-	310	203	216	283	296	356	372	136	450	62	F07	12	12	-	20	21	24	26.5
Inch	*3"*	*6.7*	*8.3*	-	*12.2*	*8*	*8.5*	*11.1*	*11.7*	*14*	*14.6*	*5.4*	*17.7*	*2.5*		*26.4*	*26.4*	-	*50.8*	*46.2*	*52.8*	*58.3*
DN	100	229	305	-	350	229	241	305	318	-	-	150	450	76	F07	20	28	-	24.5	26	29	-
Inch	*4"*	*12*	*12*	-	*13.8*	*9*	*9.5*	*12*	*12,5*	-	-	*5.9*	*17.7*	*3*		*44*	*62*	-	*55.3*	*57.2*	*63.8*	-

PRESSURE/TEMPERATURE LIMITATIONS OF SEAT SEAL

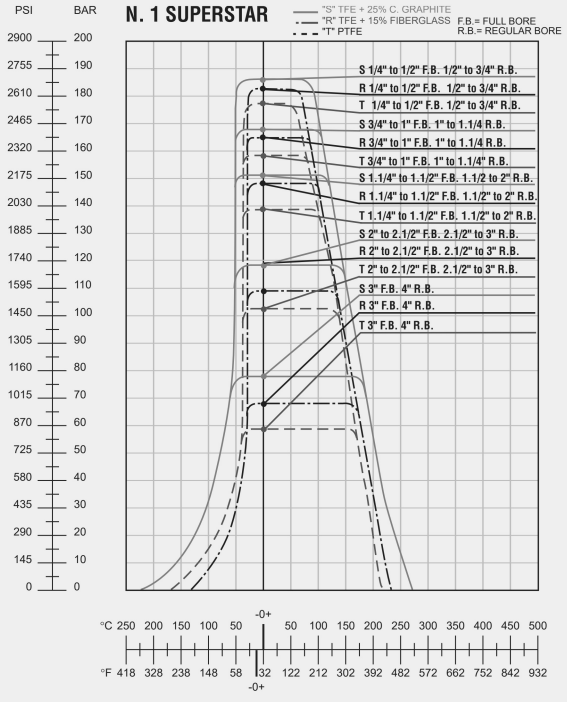

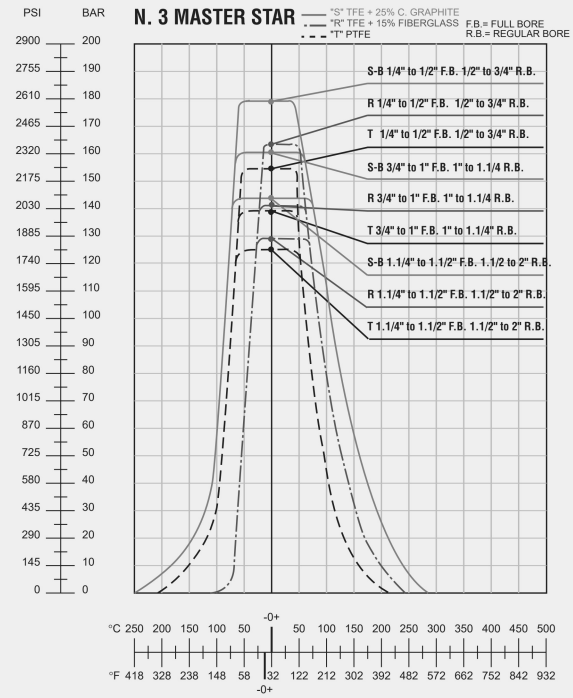

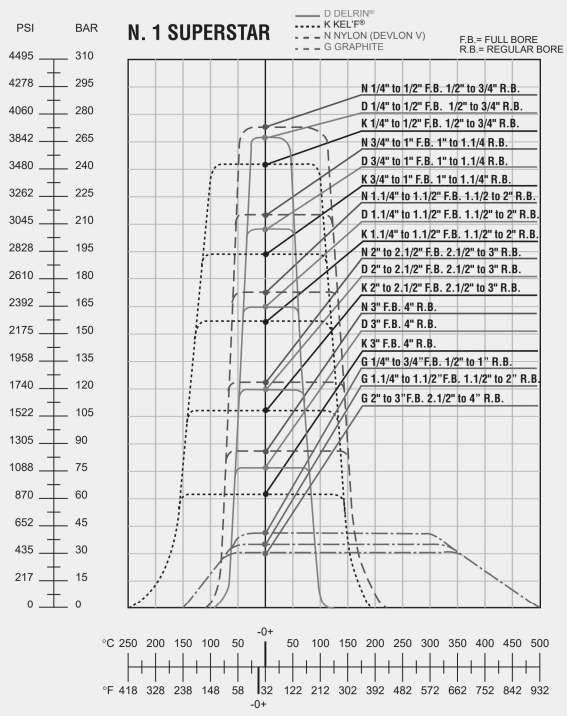

The pressure-temperature rating of soft-seated ball valves bolted - construction is determined by:
1 Type of material group N° used for valve body
2 Type of material group N° used for body bolts
3 Type of sealing material used for seal and seats
Where:
A For material group N° we refer to ASME/ANSI B16.34 (stress-dimensions - thickness -etc.)
B For seats material we have prepared general pressure-temperature chart (at full differential pressure) based upon our experiences both in the field and in our laboratory.

SOME SPECIAL SERVICE BALL VALVES

1 OXYGEN GAS - Valves tested using dry nitrogen gas. All valves are solvent cleaned and individually sealed in a polyethylene bag to prevent contamination:. 316 TT.

2 DRY, LIQUUID AND GASEOUS CHLORINE - Valves tested using dry nitrogen gas. All valves are specially cleaned and individually sealed in a polyethylene bag. A supplementary venting hole on the ball.

3 CRYOGENIC SERVICE - HELIUM LEAK TEST - Valves are dry tested. All valves are cleaned and individually sealed in a polyethylene bag. Extended stem and supplementary venting hole on the ball. For low class use T seats, medium class S seats, for class 900 and up K seats.

4 VACUUM - Until 10^{-4} torr can use all type of starling valves. For high vacuum consult factory.

5 Phenol at low temperature - Liquid asphall - Steam jacket valves.

6 ALIMENTARY - FOOD SERVICE - Valve cleaned, polished and cavity filled.

7 SLURRY SERVICE - Cavity filled.

8 ABRASIVE MEEDIA - Metal to metal seats.

9 HIGH TEMPERATURE - Metal to metal seats.

10 NACE (sour oil and gas) H_2S. All Starline FIRE SAFE valves types mmeet the requirements as a standard class 3. For class 2 and 1 must be selected proper bolts like B7M - L7M - B8M.

11 HYDROGEN PEROXIDE - NITROGEN LEAK TEST - Valves are dry tested. All valves are cleaned. Supplementary venting hole.

FLOW DATA

The following flow rates were determined for ball valves in fully open position and a water temperature of 60°F (15°C).
Kv value is the full capacity flow rate through the ball valve in cubic metres per hour (m^3/h) with a pressure drop of 1 bar.
Cv value is the full capacity flow rate through the ball valve in gallons/min. of water at 60°F with a pressure drop of 1 psi.

REGULAR BORE

VALVE	-	1/2"	3/4"	1"	1.1/4"	1.1/2"	2"	2.1/2"	3"	4"
SIZE	-	15	20	25	32	40	50	65	80	100
Cv		8	13	32	48	82	120	275	460	700
KV		6,8	11	27,5	41	70	103	236	394	600

FULL BORE

VALVE	1/4"	3/8"	1/2"	3/4"	1"	1.1/4"	1.1/2"	2"	2.1/2"	3"
SIZE	8	10	15	20	25	32	40	50	65	80
Cv	8	8	12	30	45	78	115	265	445	680
KV	6,8	6,8	10	26	38	67	99	227	381	583

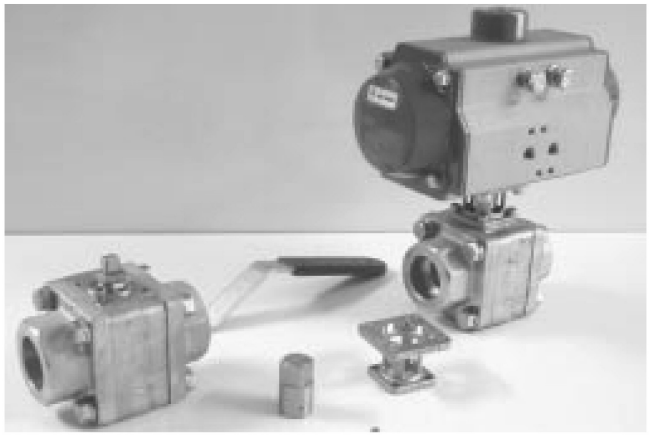

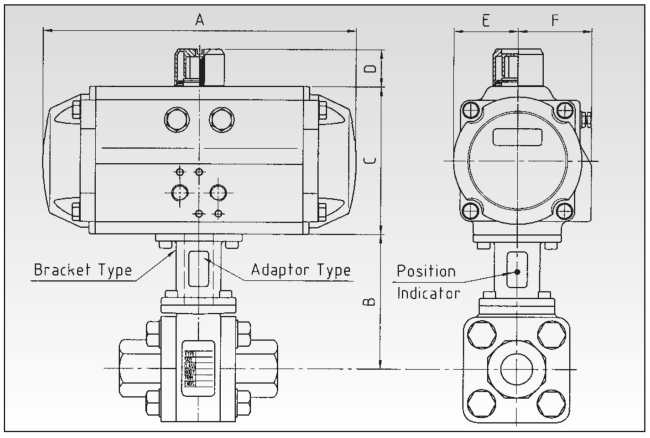

HOW TO TRANSFORM A MANUAL OPERATED VALVE IN AUTOMATED VALVES

1) Take out the handle nut
2) Take out the handle
3) For size: 1/4" - 3/8" - 1/2" F.B. or 1/2" - 3/4" R.B. handle nut is not to be fitted For bigger sizes the handle nut has to be fitted

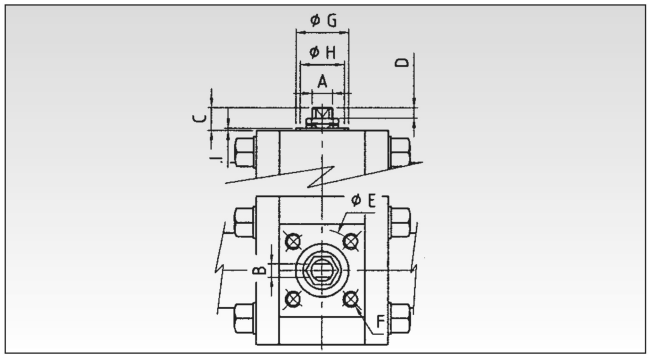

DIMENSIONS AND TORQUE TO SELECT ACTUATOR SUITABLE FOR STARLINE BALL VALVES

VALVE SIZE				TOP MOUNTING DIMENSION									BREAK AWAY TORQUE
FULL BORE		RED. BORE											
Inch	DN	*Inch*	DN	A	B	C	D	ØE	F	ØG	ØH	I	Nm
1/4"	8	-	-	M10x1	5.5	9	3.6	36	M5x8	25	21	1.5	12
3/8"	10	*1/2"*	15	M10x1	5.5	9	3.6	36	M5x8	25	21	1.5	12
1/2"	15	*3/4"*	20	M10x1	5.5	9.5	3.6	36	M5x8	25	21	1.5	16
3/4"	20	*1"*	25	M12x1.25	7.5	14	9	42	M5x8	30	25	1.5	22
1"	25	*1.1/4"*	32	M12x1.25	7.5	20	10	42	M5x8	30	25	1.5	30
1.1/4"	32	*1.1/2"*	40	M15x1.5	8.9	27	13	50	M6x10	35	30	1.5	38
1.1/2"	40	*2"*	50	M15x1.5	8.9	28	14	50	M6x10	35	30	1.5	46
2"	50	*2.1/2"*	65	M15x1.5	8.9	25	12.5	50	M6x10	35	30	1.5	90
2.1/2"	65	*3"*	80	M22x1.5	16	35	17	70	M8x12	55	48	1.5	110
3"	80	*4"*	100	M24x2	18	37.5	15	70	M8x12	55	48	1.5	125

- BREAK AWAY TORQUE AT MAX. WORKING PRESSURE WITH SEATS TYPE PTFE + 25% C. GRAPHITE "S" FOR SEATS IN VIRGIN PTFE 'T' -5%.
-CONVERSION FACTORS: 1Nm= 0,7376 Lb-in / 1 lb.ft.= 1.365 Nm / 1 Nm= 8,86 Lb-in

TABLE FOR AUTOMATION

VALVE SIZE & TOP ISO					DOUBLE ACTING ACTUATOR								
FULL BORE		RED. BOR		ISO	DIMENSIONS (mm)						ACTUATOR TYPE	Bracket Type	Adaptor Type
Inch	DN	*Inch*	DN	5211	A	B	C	D	E	F			
1/4"	8	-	-	F03	140.5	65	69	20	29	41.5	AT 051 DA ISO F04-CH14	ST1	A1/E
3/8"	10	*1/2"*	15	F03	140.5	65	69	20	29	41.5	AT 051 DA ISO F04-CH14	ST1	A1/E
1/2"	15	*3/4"*	20	F03	158.5	67	85	20	36	47	AT 101 DA ISO F05-CH14	ST1	A1/A
3/4"	20	*1"*	25	F04	158.5	73	85	20	36	47	AT 101 DA ISO F05-CH14	ST2	A2/A
1"	25	*1.1/4"*	32	F04	210.5	73	102	20	42.5	52	AT 201 DA ISO F05/F07-CH14	ST2	A2/B
1.1/4"	32	*1.1/2"*	40	F05	210.5	82	102	20	42.5	52	AT 201 DA ISO F05/F07-CH14	ST3	A3/E
1.1/2"	40	*2"*	50	F05	210.5	86	102	20	42.5	52	AT 201 DA ISO F05/F07-CH14	ST3	A3/E
2"	50	*2.1/2"*	65	F05	247.5	97	115	20	49.5	56.8	AT 251 DA ISO F05/F07-CH17	ST3	A3/B
2.1/2"	65	*3"*	80	F07	268.5	115	127	20	56	67	AT 301 DA ISO F05/F07-CH17	ST4	A4/G
3"	80	*4"*	100	F07	268.5	132	127	20	56	67	AT 301 DA ISO F05/F07-CH17	ST4	A5/E

VALVE SIZE & TOP ISO					SPRING RETURN ACTUATOR (S10)								
FULL BORE		RED. BOR		ISO	DIMENSIONS (mm)						ACTUATOR TYPE	Bracket Type	Adaptor Type
Inch	DN	*Inch*	DN	5211	A	B	C	D	E	F			
1/4"	8	-	-	F03	158.5	65	85	20	36	47	AT 101 S10 ISO F05-CH14	ST1	A1/A
3/8"	10	*1/2"*	15	F03	158.5	65	85	20	36	47	AT 101 S10 ISO F05-CH14	ST1	A1/A
1/2"	15	*3/4"*	20	F03	210.5	67	102	20	42.5	52	AT 201 S10 ISO F05/F07-CH14	ST1	A1/A
3/4"	20	*1"*	25	F04	210.5	73	102	20	42.5	52	AT 201 DA ISO F05/F07-CH14	ST2	A2/A
1"	25	*1.1/4"*	32	F04	247.5	73	115	20	49.5	56.8	AT 251 S10 ISO F05/F07-CH17	ST2	A2/E
1.1/4"	32	*1.1/2"*	40	F05	268.5	82	127	20	56	67	AT 301 S10 ISO F05/F07-CH17	ST3	A3/A
1.1/2"	40	*2"*	50	F05	268.5	86	127	20	56	67	AT 301 S10 ISO F05/F07-CH17	ST3	A3/A
2"	50	*2.1/2"*	65	F05	268.5	97	127	20	56	67	AT 301 S10 ISO F05/F07-CH17	ST3	A3/B
2.1/2"	65	*3"*	80	F07	345	115	157	30	69.5	82	AT 401 S10 ISO F07/F10-CH22	ST4	A4/A
3"	80	*4"*	100	F07	345	132	157	30	68.5	82	AT 401 S10 ISO F07/F10-CH22	ST4	A5/A

General Remarks:

1) The above actuators have been selected considering an air supply of 80 psi or 5,6 bar.
2) On spring return actuators the N. of spring per side is 5.
3) For different air supply please see Air Torque Catalogue.
4) Bracket and adaptor are dimensioned to fit Air Torque actuators.
5) When air supply for actuator is lower than 5,6 bar bigger actuator must be selected and bracket plus adaptor become special

It must be understood that many factors can influence the torque of ball valves in field service. For this reason to SELECT PROPER ACTUATOR it must be used the "TORQUE ADJUSTMENT FACTORS" table no. A003/94.

Net Break Away Torque of Valves	+	Process Media	+	Frequence of Operation	+	Process Temperature	+	Valve Seating Material	+	Suggested Safety Factor	=	Torque to Select Actuator or Gear in Nm

"STARLINE" BRACKETS ISO 5211 IN STAINLESS STEEL

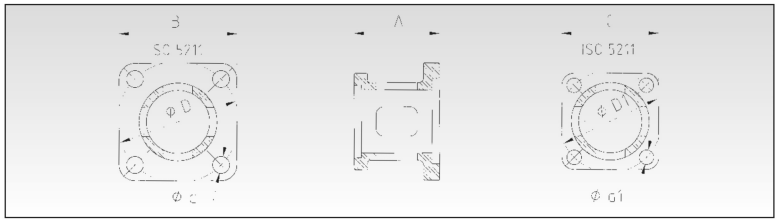

TYPE OF BRACKET	DIMENSIONS (mm)							ISO 5211
	A	B	C	D	D1	d	d1	
ST1	35	48.5	36.5	42-50	36	6-7	6	F03/ F04-F05
ST2	35	48.5	40	50	42	7	6	F04/F05
ST3	39	48.5	48.5	50	50	7	7	F05/F05
ST35	45	65.5	48.5	70	50	9	7	F05/F07
ST4	45	65.5	65.5	70	70	9	9	F07/F07
ST5	56	92	92	102	102	11	11	F10/F10